SIE 2015
6th International Symposium on Industrial Engineering
24th-25th September 2015
FACULTY OF MECHANICAL ENGINEERING
STEINBEIS ADVANCED RISK TECHNOLOGIES
INNOVATION CENTER FME

CALCULATING GEOMETRIC PARAMETERS OF THE SEMI-ROLLED STRAIGHT PAN GEAR

Vladimir N. Syzrantsev[1], Kseniya.V. Syzrantseva[2], Andrey A. Pazyak[3]
[1]Doc. Sc. (Engineering), Professor, Honorary worker of science of the Russian Federation, the chief of department «Machinery and equipment of oil and gas industry»;
[2]Cand. Sc. (Engineering), assoc. professor, department «Cybernetic systems»;
[3]Postgraduate, teaching assistant, department «Machinery and equipment of oil and gas industry»
Tyumen State Oil and Gas University, Tyumen, Russian Federation

Abstract. *To recover high-viscosity oil using progressive cavity pumps it is necessary to apply reduction gear boxes with the gear ratio of 7-30 located in the wellbore between the motor and the pump. Currently used planetary reduction gear boxes with the required gear ratio are hard to manufacture, have a low performance coefficient and do not possess the desired reliability.*
To improve the reliability of progressive cavity pumps when recovering high-viscosity oil we can use a coaxial reduction gear box with a pan precess gear.
The work describes the geometry of a semi-rolled straight pan gear. The given method of cutting pinion and gearwheel teeth significantly simplifies its manufacture technology. Multiple teeth in contact allow for the required gear load capacity and reduction gear box reliability.
Based on the developed geometry reduction gear boxes were manufactured with the gear ratio of 10-21 for progressive cavity pumps to recover high-viscosity oil.
Key words. *Coaxial reduction gear box, semi-rolled pan gear, straight teeth*

INTRODUCTION

Coaxial reduction gear boxes [1, 2, 3], developed on the basis of the pan precess gear, allow creating compact drives for oil and gas machinery that have a high performance coefficient (about 0.9), low starting torque, which is crucial for drive operation under severe operation conditions, and a wide range of gear ratios (10-65 and more). Currently, the most fully researched pan gears are those with double concavo-convex teeth [4, 5]. The process of cutting such teeth is not only labor-intensive, but also incredibly complex. It requires four re-settings of the gear-cutting machine, as each tooth side is cut separately. In the given work we discuss the semi-rolled straight pan gear with a simplified procedure of manufacturing its gearwheel teeth. Despite the absence of contact in the gear of interest, due to multiple teeth meshing, it is commercially viable when producing high-load drives operating under conditions of low shaft speeds and short-term work modes.

Figure 1. Coaxial reduction gear box with gear ratio $i = 20$

Figure 2. Pipion with double-concavo teeth

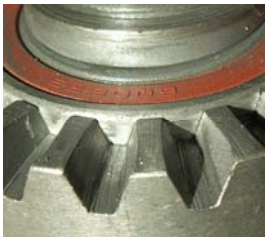

Figure 3. Gearwheel with double-convex teeth

SHAPING GEAR TOOTH

Figure 4 shows the gear diagram. Cutting of the gearwheel tooth cavity is done by a tool with a straight-line cutting edge. During such treatment the gearwheel remains fixed. Prior to cutting each of the following tooth cavity, the gearwheel rotates at an angle divisible by the tooth pitch angle, i.e. a method of singular division is realized. As tools we can use cutters (cutting on a gear shaping machine without rolling), end-mill type cutters or side mills (cutting on a milling machine with a turntable).

From the described method of cutting it follows that the gearwheel tooth flank is a plane. The reference tooth surface is a plane that goes through the tooth reference point M parallel to the plane $x_2 o_2 y_2$ (perpendicular to the axis z_2). The coordinate system $S_2(x_2, y_2, z_2)$ is firmly connected to the gearwheel. The gearwheel tooth flank in the coordinate system $S_p(x_p, y_p, z_p)$, which axis y_p is directed along the normal towards the tooth surface, is a plane and in this system of coordinates its equation is:

$$x_p = u\,;\, y_p = 0\,;\, z_p = h\,, \qquad (1)$$

where u - a linear coordinate along the gearwheel tooth length, h - a linear coordinate along the gearwheel tooth profile.

Let us express the radius vector $\overline{r_p}$ of the gearwheel tooth surface (plane) in the coordinate system $S_p(x_p, y_p, z_p)$ as a row matrix $\tilde{r}_p = \left\| x_p\,;\, y_p\,;\, z_p\,;1 \right\|$, the elements of which are coordinates x_p, y_p, z_p, and the radius vector of the gearwheel tooth surface $\overline{r_2}$ in the system $S_2(x_2, y_2, z_2)$, - as a row matrix $\tilde{r}_2 = \left\| x_2\,;\, y_2\,;\, z_2\,;1 \right\|$, the elements of which are coordinates x_2, y_2, z_2. Then the gearwheel tooth surface in the system $S_2(x_2, y_2, z_2)$ is described as the dependence:

$$\tilde{r}_2 = \tilde{A}_{2p} \cdot \tilde{r}_p\,, \qquad (2)$$

where $\tilde{A}_{2p}$ - the fourth order matrix [5, 6], determining the transition from the coordinate system S_p to the system S_2.

Uncovering the expression (2) we get:

$$\left.\begin{aligned} x_2 &= u \cdot \cos\theta_{f2} - h \cdot \sin\theta_{f2} \cdot \cos\alpha_n - r_2 \\ y_2 &= -h \cdot \sin\alpha_n + t \\ z_2 &= u \cdot \sin\theta_{f2} + h \cdot \cos\theta_{f2} \cdot \cos\alpha_n \end{aligned}\right\} \qquad (3)$$

where θ_{f2} - the decrement angle; α_n - the pressure angle; r_2 - the mean cone distance; t - a half of the tooth thickness.

In the studied semi-rolled pan gear the gearwheel tooth surface is an envelope in a one-parameter movement of the gearwheel tooth surface. The generating surface is a straight gearwheel tooth flank (plane). Let us refer to Figure 4, which demonstrates the coordinate system $S_2(x_2, y_2, z_2)$, firmly connected to the gearwheel, and the coordinate system $S_1(x_1, y_1, z_1)$, firmly connected to the pinion during gearwheel tooth shaping.

When cutting teeth, due to the machine kinematics, when the wheel tooth rotates along its axis at an angle φ_2 the workpiece rotates along its axis at an angle φ_1, connected to the angle φ_2 by the dependence:

$$\varphi_1 = \varphi_2 \cdot i\,, \qquad i = z_2^* / z_1^* \qquad (4)$$

where i - the gear ratio of the machine roll, z_2^* - a number of gearwheel teeth, z_1^* - a number of pinion teeth.

Coordinates of the current point of the gearwheel tooth surface (1) are determined by two independent parameters: u and h, that is $\tilde{r}_2 = \tilde{r}_2(u, h)$. Due to the above-mentioned rolling motion when shaping the pinion tooth surface, the relative motion matrix $\tilde{A}_{12}$ is a function of φ_1: $\tilde{A}_{12} = \tilde{A}_{12}(\varphi_1)$. The radius vector $\overline{r_1}$ of the pinion tooth surface in the coordinate system $S_1(x_1, y_1, z_1)$ (Figure 4), in matrix form is expressed as:

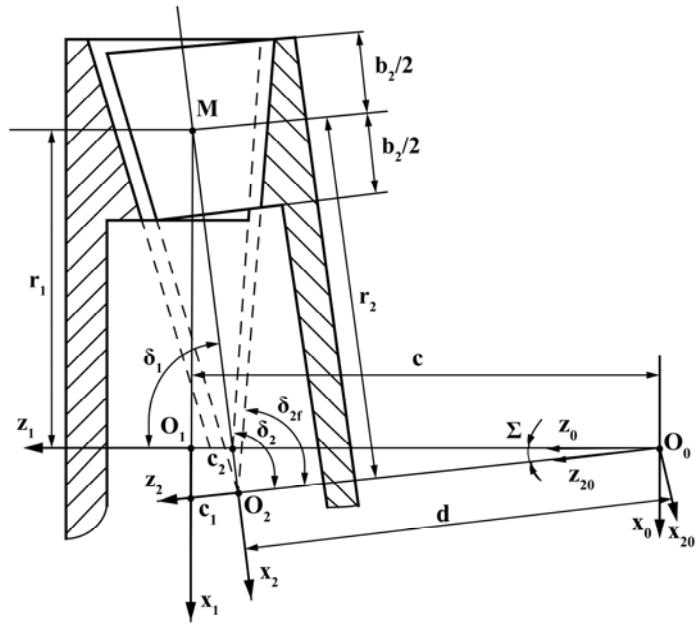

Figure 4. Design scheme of a semi-rolled pan gear and scheme for calculating transition from the coordinate system S_2 to the system S_1.

$$\widetilde{r}_1 = \widetilde{A}_{12} \cdot \widetilde{r}_2 , \qquad (5)$$

where $\widetilde{r}_1 = \|x_1, y_1, z_1, 1\|$ - a row matrix, composed of coordinate projection of the radius vector $\overline{r_1}$ of the pinion tooth surface.

Uncovering (5), we get:

$$\widetilde{r}_1(u,h,\varphi_1) = \widetilde{A}_{12}(\varphi_1)\widetilde{r}_2(u,h) . \qquad (6)$$

As the surface can have only two independent parameters, for mathematical description of the pinion tooth surface it is necessary to establish an additional connection between parameters φ_1, u and h. In the theory of tooth meshing [6] such connection is referred to as a meshing equation:

$$f(u,h,\varphi_1) = 0 . \qquad (7)$$

If the meshing equation is known, the pinion tooth surface, as a family envelope of the gearwheel tooth surface, is described as follows[6, 7]:

$$\widetilde{r}_1(u,h,\varphi_1) = \widetilde{A}_{12}(\varphi_1)\widetilde{r}_2(u,h) ;$$

$$f(u,h,\varphi_1) = 0 . \qquad (8)$$

To determine the meshing equation, in the given paper we used the method suggested in [7]. As a result, the dependences determining the pinion tooth surface have the form:

$$x_1 = A_1 \cdot \cos\varphi_1 + B_1 \cdot \sin\varphi_1 ;$$

$$y_1 = -A_1 \cdot \sin\varphi_1 + B_1 \cdot \cos\varphi_1 ; \qquad (9)$$

$$z_1 = \sin\Sigma \cdot (f_3 \cdot \sin\varphi_2 - f_1 \cdot \cos\varphi_2) + \\ + \cos\Sigma \cdot (f_2 + d) - c$$

$$\varphi_2 = \arcsin\left[-C_\varphi (\sqrt{A_\varphi^2 + B_\varphi^2})^{-1} \right] - \xi ;$$

where r_1 - the mean cone distance of the pinion; Σ - the shaft angle in the gear.

$$f_1 = u \cdot \cos\theta_{f2} - h \cdot \sin\theta_{f2} \cdot \cos\alpha - r_2 ;$$

$$f_2 = u \cdot \sin\theta_{f2} + h \cdot \cos\theta_{f2} \cdot \cos\alpha ;$$

$$f_3 = t - h \cdot \sin\alpha ;$$

$$c = r_1 \cdot (i - \cos\Sigma) \cdot (\sin\Sigma)^{-1} ;$$

$$d = r_1 \cdot (i \cdot \cos\Sigma - 1) \cdot (\sin\Sigma)^{-1} ;$$

$$A_1 = \cos\Sigma \cdot (f_1 \cdot \cos\varphi_2 - f_3 \cdot \sin\varphi_2) + \\ + \sin\Sigma \cdot (f_2 + d) ;$$

$$B_1 = f_3 \cdot \sin\varphi_2 - f_1 \cdot \cos\varphi_2 ;$$

$$A_\varphi = \sin\alpha \cdot \sin\Sigma \cdot \\ \cdot (u + d \cdot \sin\theta_{f2} - r_2 \cdot \cos\theta_{f2}) ;$$

$$B_\varphi = -\sin\Sigma \cdot (f_2 \cdot \cos\alpha - \\ - f_3 \cdot \sin\alpha \cdot \cos\theta_{f2} + d \cdot \cos\alpha) ;$$

$$C_\varphi = (i^{-1} - \cos\Sigma) \cdot \\ \cdot (f_1 \cdot \cos\alpha + f_3 \cdot \sin\theta_{f2} \cdot \cos\alpha) .$$

These formulas enable us, on the one hand, to perform the analysis of the pinion flank shaping, and,

on the other hand, to study the nature of meshing pinion and gearwheel teeth in a semi-rolled pan gear, which is matching according to the way it shapes pinion teeth.

ANALYSIS OF THE GEOMETRIC CHARACTERISTICS OF GEAR TEETH MESHING

Based on dependences (9) in MathCad software a program was developed to study the position and nature of contact lines in teeth meshing of the semi-rolled pan gear. To illustrate the program operation, for a number of fixed values of the pinion rotation angle (φ_1 =-0,172; -0,115; -0,057; 0,0; 0,088; 0,177; 0,265) Figure 5 shows its surface contact lines with the gearwheel tooth surface of a semi-rolled pan gear, with the parameters: z_1^*=64; z_2^*=65; Σ =2°; mean normal module m_n =5,0 mm; tooth height ratio h_a^*=1; radial clearance ratio c_o =0,5; face width b_2 =25 mm; gearwheel pitch angle δ_2 =90°.

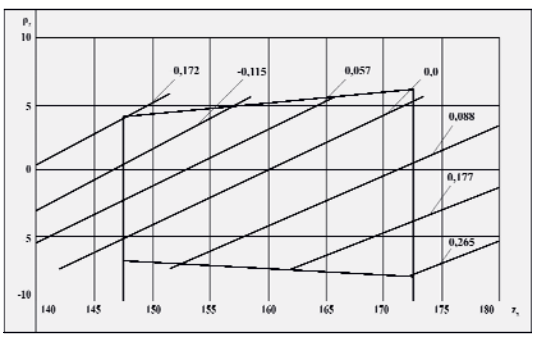

Figure 5. Momentary contact lines on the pinion tooth surface

In the studied semi-rolled gear a change in angle φ_1 from $\varphi_{1\min} = -0{,}172$ to $\varphi_{1\max} = 0{,}265$ corresponds to a maximum tooth meshing phase. Considering the value of the tooth pitch angle on the pinion ($t_1 = 2 \cdot \pi / z_1^* = 0{,}09817$), we determine that $(-\varphi_{1\min} + \varphi_{1\max}) / t_1 = 4{,}45$ tooth pairs are simultaneously in contact in the gear.

REFERENCES

[1] Syzrantsev V.N., Wiebe V.P., Denisov Y.G. *Coaxial reduction gear*. Patent 2529943 C1 (RU), F16H 1/32, F04B 47/02, F04C 2/107, Russian Federation, 2014.

[2] Syzrantsev V.N., Plotnikov D.M., Denisov Y.G., et al. *Installing downhole screw pump*. Patent 2334125 C1 (RU), F04C 2/107, F04B 47/02, 2008.

[3] Syzrantsev V., Plotnikov D. The submersible hole screw pump assembly driven by precessional gear/. Monograph "*MACHINE DESIGN*", Novy Sad, Republic of Serbia, - 2009, pp.295-298.

[4] Syzrantsev V, Golofast S. Drives of pipelines' block valve based on the pan precess gear. *Global Journal of Researches in Engineering: A Mechanical and Mechanics Engineering (USA)* 2014; 14(2): pp. 15-17.

[5] Syzrantsev V.N., Golofast S.L. Drives of pipelines block valve based on the pan precess gear. *Science and technology in the gas industry* 2014; 1: pp. 64-67.

[6] Litvin F.L. Theory of Gearing – Moscow: Nauka, 1968. - 584 p.

[7] Yerikhov M.L. Synthesis of gearing on the condition of insensitivity to mounting errors. *Automobile transport.* №. 17. – Khabarosk, 1969. – pp. 2-36.