SIE 2015
6th International Symposium on Industrial Engineering
24th-25th September 2015
FACULTY OF MECHANICAL ENGINEERING
STEINBEIS ADVANCED RISK TECHNOLOGIES
INNOVATION CENTER FME

DIDACTIC EQUIPMENT FOR EDUCATION OF STUDENTS IN AUTOMATED HYDRAULIC SYSTEMS

M.Jocanovic[1], V.Karanovic[1], M.Velickovic[2]
[1]Faculty of Technical Sciences, University of Novi Sad, Serbia
[2]Festo GmbH, Belgrade, Serbia

Abstract. *In the field of technical knowledge transfer it is of the highest significance to include practical training and education in the education system as well. There are only few world famous companies producers of both industrial components and didactic equipment as well. Didactic components for hydraulics ensure large spectrum of possibilities and introducing to the students the basic principles of hydraulic components functions, as well as their implementation and functioning and simulations within specific hydraulic systems. This article presents product scope of didactic components of one of the largest world companies, producers of both industry automation and didactic components and solutions – Festo company.*

Key words: didactic equipment, hydraulic systems, automation, practical knowledge.

1.INTRODUCTION

Modern educational equipment and didactic tools are of the key significance for education of students nowadays, as well as to accomplish and sustain continual achieving both theoretical and especially practical knowledge. In hydraulic components and hydraulic systems areas, it is very important for a student to learn both necessary theoretical basics about the component work, and to place the components in an imaginary hydraulic system, and by using an appropriate didactic tool to determine, simulate, and prove both the functionality of the component in the suggested system, and the functionality of the system as a hole. From the equipment available in the world market, there are only few producers of hydraulic equipment (and those who do not directly deal with production of hydraulic industrial components) who make possible through their didactic equipment and simulation softwares - performing of modern, advanced education, simulations and experimental testings.

From available didactic tools used as education resources for hydraulics there are following companies present with their didactic equipment: Festo [1], Bosch Rexroth [2], Exago Group [3], ElveTechnic[4], and only couple of other companies in the world market.

2.DIDACTIC EQUIPMENT DESIGNED FOR BASIC AND ADVANCED LEVELS OF TRAININGOF COMPANY FESTO DIDACTIC

FESTO Didactic GmbH & Co. KG is one of the companies most actively participating in cooperation and training of students in our country. Through active cooperation with technical colleges in our country, didactic products placed in the market of our country and surrounding markets belong to the top high technology solutions by their functionality and variety. The aim of this work is to, through short didactic products portfolio of company Festo, to present some of possibilities of didactic components used for trainings and simulations, partly also for laboratory experiments. Equipment of company Festo consists of several product areas which are designed from the basic sets and then followed by more complex ones, so the students can learn gradually with the appropriate didactic tools.

2.1 Basic level trainings

For the basic level trainings equipment is designed for introducing of students with elementary functions of hydraulic components and concerns classical and proportional constructions. Equipment is designed (Figure 1) to allow trainings of two student groups at one working place: they can simultaneously follow trainers lectures and compare directly hydraulic schemes, learning about the functionality of components and systems.

Figure 1. *Example of didactic equipment for students basic training level in hydraulics [5].*

Equipment concept is such to allow the students the following:

- Introducing of students to variety of components used in mobile and stationary hydraulics;
- Introducing of students with various types of hydraulic systems used in mobile or stationary systems (open, semi-closed or closed hydraulic systems);
- Training of students allowing the students to learn on practical problems bound for hydraulic system and check theoretical knowledge in calculation of force, flow rate, speed, pressure and power of hydraulic system,
- Independent and safe installation of hydraulic components of students to didactic system work place;
- Students training, as it is in practice, to select and plug in hydraulic components into a system, perform control in a correct manner and safely set the system to work.

Besides the named possibilities given for students training, basic level of didactic equipment includes an amount of written work material concepted in a way to enable students to get introduced to every component within hydraulic system (pumps, motors, valves, hydraulic cylinders...), its functionality and part in hydraulic system. Also, functionality and part of each hydraulic component is worked on and shown through practical exercise –every hydraulic system from the exercise is mounted with accompanied component on a didactic table.

Advanced students training level

Through advanced students trainings, trainees are educated to use equipment from basic sets for trainings in electro-control of components with components in basic and advanced sets.

Besides the equipment from basic sets, Festo enables an option for certain components packages, to upgrade the basic level and allow students education with controlling and functions of proportional hydraulics. This way wide possibility is given to both students and professors to learn and simulate with add on equipment and study different applications of both classical and proportional hydraulics. This equipment level enables wide potential for students to get better knowledge of complex hydraulic systems functions, their control, as well to work on various examples of hydraulic systems use in stationary and mobile applications.

Besides named options, Festo didactic equipment allows didactic equipment (hardware) add-on devices with wide portfolio of electro-control components which enable students trainings in area of controlling by use of relay and PLC (*Programmable Logic Controller*) components – Figure 2. Besides these, Festo enables add-on`s with sensor components as well.

Figure 2. *Festo PLC didactic module [6].*

Besides named equipment modules that further can be built on, and expand learning of trainees this way, Festo offers modular equipment with combinations of pneumatic and hydraulic control or combinations of electronic and mechanical equipment or some other type of control. These modules are used to show in practical way-work of some mechanism, technical solution or technology process – figure 3.

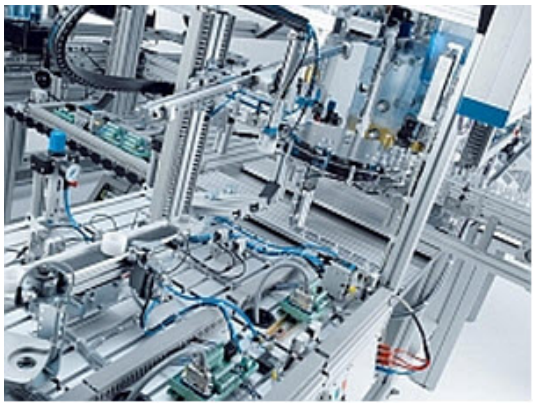

Figure 3. *Automated system in production [7].*

3. MODULES DESIGNED TO MEASURE WORK PARAMETERS OF HYDRAULIC SYSTEMS

Along with the earlier mentioned equipment, Festo Didactic expands with modules consisted also of some components enabling follow up and fine tuning of work parameters during work of hydraulic system. This equipment simplifies in many details to a student to comprehend formation and control of certain physical values appearing during work of each hydraulic system work. Within this package there are certain flow meters types, devices for measurement of actuator rode speed or rotating speed of motor output shaft, digital and analog pressure regulators, and so on.

4. SOFTWARE PACKAGES

Software packages used for students' trainings for hydraulics are widely spread and each producer of didactic equipment has developed his original software for education using their own didactic table.

Basic software packages that Festo developed, known by the name FluidSim® and FluidLab® allow the trainees – to simulate everything they learned in theory and calculate working parameters in order to show later the same in the real hydraulic system (didactic table). In this way it is enabled complete student education, exactly option that student with appropriate simulating and hardware equipment gets to learn about the hydraulic component and the system as a whole.

Besides the hydraulic components work simulation, and of the system itself, in FluidSim software and FluidLab there is possibility of creating electronic schemes through which one can control specific electrical components in hydraulic system. This enables that through work simulation of the whole hydraulic system along with its control in real system avoid the most frequent errors made, and construction or project errors are also reduced to a minimum.

Besides these, there are also software packages for control in process industry like SCADA systems (Supervisory Control And Data Acquisition). This software type gives information about important work parameters during work of hydraulic or process system – figures 4 and 5.

In the process of follow up and working with certain system work parameters, to software package user is given a possibility to use a wide portfolio of different components (electro-mechanical, hydraulic and pneumatic) and to, with systems for follow up, control and system regulation (sensors, relays, PLCs) perform necessary corrections in the work of certain component or work parameter, in order to get technological process to correct state and keep it in needed and defined tolerances.

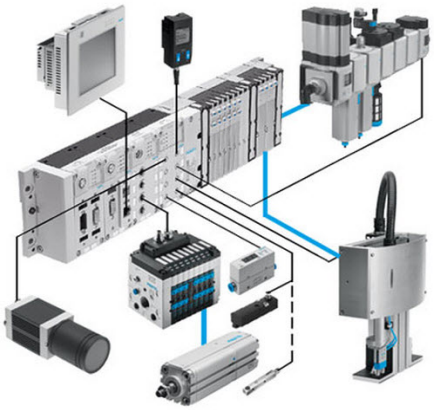

***Figure 4**. Components connections and control units in one SACDA system [8].*

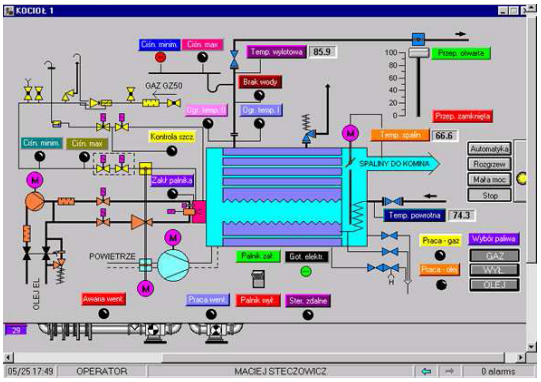

***Figure 5**. SCADA software for following specific work parameters in the system process [9].*

5. CONCLUSION

Within area of automated control of hydraulic system, it is necessary to follow certain trends in didactic means development and students training, to allow achieving better understanding and acquisition of knowledge from use and regulation in hydraulic systems. Besides reaching academic knowledge, students are given possibilities of gaining practical knowledge which is very important for easier employment, because employer expects also from the engineer practical use of the academic knowledge.

In this way, system of education and training of students is lifted up for a level, without obligation for students to have additional practice learning in industrial companies, where the training comes more to training for a single process industry type.

Apply of certain didactic resources, makes possible broad knowledge transfer and practical training in wide spectrum of process and mobile applications. It is important to emphasize that practical trainings need to be performed, especially when the technical solutions develop in a very fast pace as they do nowadays. The time has come when no more the experts of specific narrow specialties are enough: we need experts of wider knowledge who apply

combination out of different areas of electronics, mechatronics, machine engineering etc.

In the future, concept of didactic resources for gaining specific technical knowledge will be practically an obligatory part of education, and with development of new software solutions and simulations, even the technical – hardware part is possible to evolve in advantage simulation softwares or distance learning in order to allow the cheapest and simplest way of education.

REFERENCES

[1] http://www.festo-didactic.com/int-en/learning-systems/equipment-sets/hydraulics/hydraulic-power-units/?fbid=aW50LmVuLjU1Ny4xNy4yMC41NTk

[2]http://www.boschrexroth.com/en/xc/training/training-program/index

[3] http://www.exago-group.com/design-manufacturing-of-hydraulic-didactic-equipments-standard-or-on-request.html

[4] http://www.ld-didactic.de/en/products-solutions/automotive-technology-electrical-engineering-renewable-energy/elwe-technik.html

[5] http://www.festo-didactic.com/int-en/services/printed-media/brochures-catalogue/hydraulics-vocational-and-further-training-with-festo-didactic.htm?fbid=aW50LmVuLjU1Ny4xNy4zMi45MDAuNzQ2Mg

[6] http://www.festo-didactic.com/int-en/learning-systems/equipment-sets/automation-technology-plc/cpx-cec-edutrainer-compact.htm?fbid=aW50LmVuLjU1Ny4xNy4xOC4xMjMxLjc1MTU

[7]http://www.festo-didactic.com/int-en/learning-systems/learning-factories,cim-fms-systems/afb-factory-hybrid-production/the-production-zones.htm?fbid=aW50LmVuLjU1Ny4xNy4xOC45OTcuNTE3OQ

[8] http://www.festo.com/cms/en-us_us/9851.htm

[9] http://www.emas-ms.com/galeria.html